GENERAL DRAWING

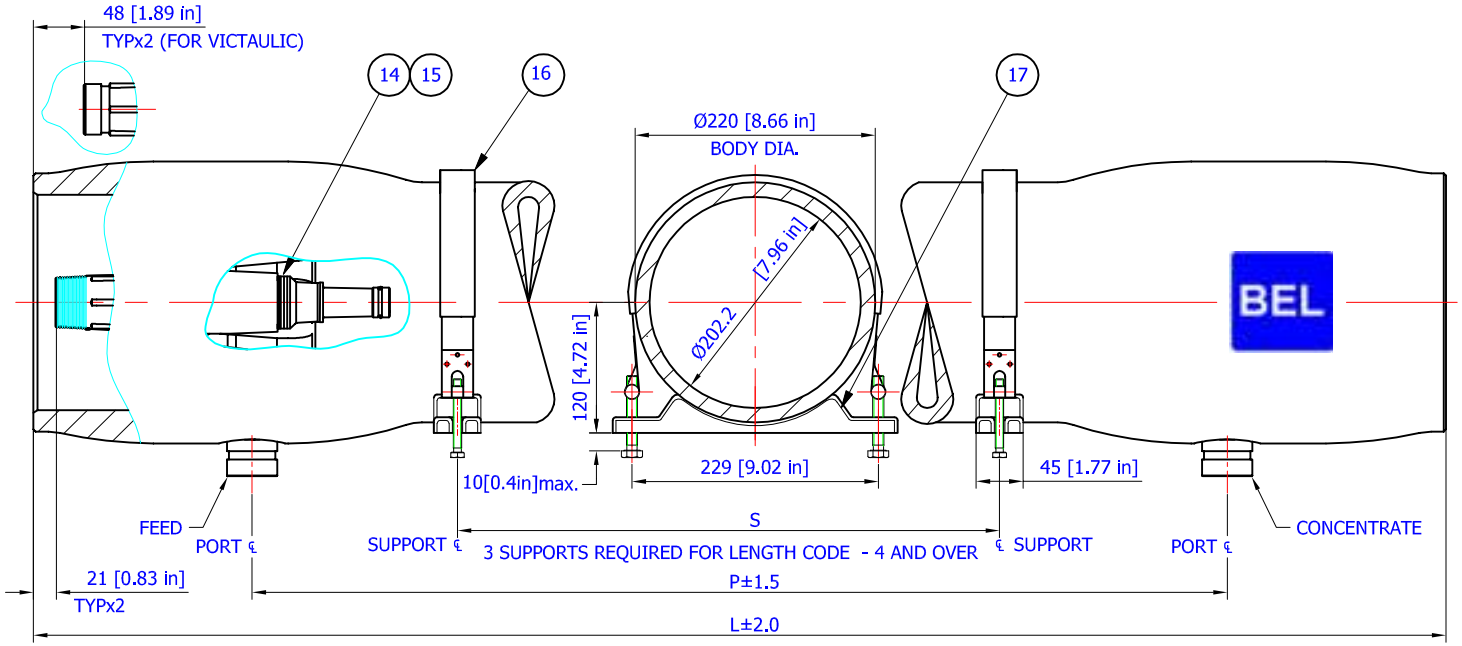

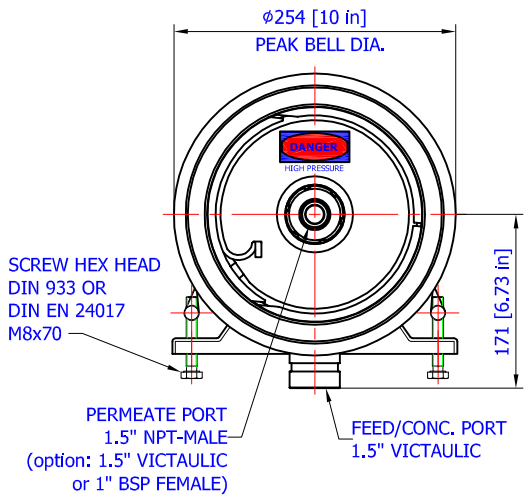

This drawing is an integral part of the general statement of use and Technical Manual

Shell length code	L (l.o.a.) mm. / inch	P, port to port mm. / inch	S# (span) mm. / inch	M, mm/in length for membranes elements	W weight kg. / lb.	Article number
1	1566	1194	710	1032	45.6	81600-1
	61.7	47	28	40.6	100.6	
2	2582	2210	1550	2048	59.7	81600-2
	101.7	87	61	80.6	131.7	
3	3598	3226	2550	3064	73.8	81600-3
	141.7	127	100	120.6	162.7	
4	4614	4242	3250	4080	87.9	81600-4
	181.7	167	128	160.6	193.7	
5	5630	5258	4250	5096	101.9	81600-5
	221.7	207	167	200.6	224.8	
6	6646	6274	5250	6112	116	81600-6
	261.7	247	207	240.6	255.8	
7	7662	7290	6250	7128	130.1	81600-7
	301.7	287	246	280.6	286.8	
8	8678	8306	7250	8144	144.2	81600-8
	341.7	327	285	320.6	317.9	

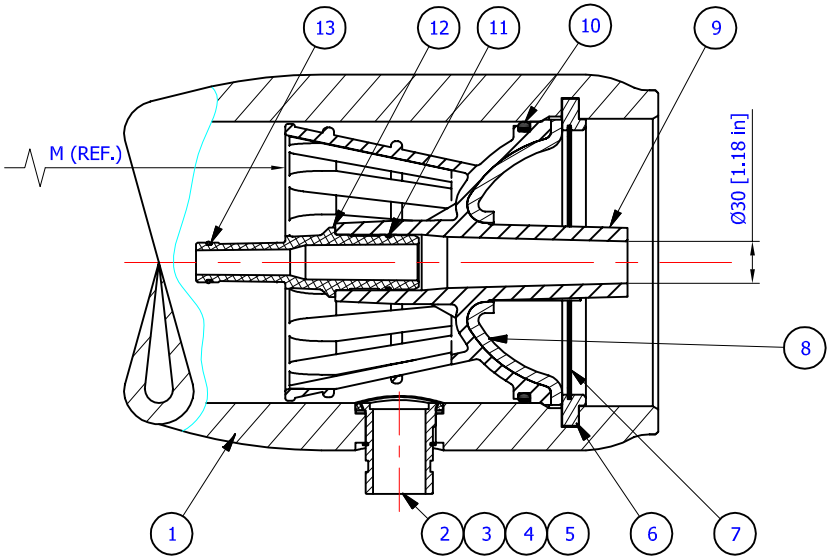

Warning.

1. Never pressurize a pressure vessel that was not loaded with membrane elements.
2. Wrong manifolding may effect an excessive load on port what can lead to leaks.
3. Max. allowable working pressure not to exceed 600 psi. (41.4 bar).
4. Permeate internal pressure not to exceed 125 psi. (8.6 bar).
5. Operating temperature not to exceed 49°C (120°F).

Notes:

1. **All dimensions are for reference only, not for construction unless certified.**
2. Item 14 & 15 should be located on feed side.
3. Drawing unit: mm. (inches)
4. Saddles can be shimmed if required.
5. Do not scale drawing, may be reprinted on any paper size or copied.
6. **Length between ports (P) can be changed to adapt old dimension - with customer's special request.**
7. **The vessel is supplied with two strap assembly.**

Item	Part number	Q-ty	Title	Material
1	81600-0	1	Body of Pressure Vessel	Glass/Epoxy
2	040-156-0600	2	F/C Port 1.5"	Stainless steel
3	006-156-1203	2	Disk for side port	Metal plate
4	014-150-0506	2	Seal for side port	EPDM
5	011-150-1202	4	Retaining ring for side port	Stainless steel
6	55410299	2	Support ring	Aluminum
7	011-801-1202	2	Retaining ring (finger hook)	Stainless steel
8	285453003	2	Metal cap	Metal plate
9	285779010/v/g	2	End cap	Engineering plastic
10	007-080-0092	2	Seal for End cap	EPDM
11	285773918	2	Seal for Adapter	EPDM
12	As required	2	Adapter	Engineering plastic
13	As required	2-4	Membrane seal	EPDM
14	285779231	0-3	Disk spacer - 1 mm.	Engineering plastic
15	285779233	0-7	Disk spacer - 3 mm.	Engineering plastic
16	55410310	2	Strap Assy.	Stainless steel
17	55410351	2-3	Saddle	Engineering plastic
18				

BEL	TITLE: BEL 8-S-600 psi. RO PRESSURE VESSEL	DESIGN	Daria P.	10/11/2011
		CHECK	Yuri V.	10/11/2011
DRAWING No.	8s15-600	APPR.	Ari A.	10/11/2011

THIS DRAWING IS PROPERTY OF BEL GROUP LIMITED IT IS STRICTLY FORBIDDEN TO USE, COPY, REPRODUCE OR DISCLOSE ANY PART OF IT TO THIRD PARTY WITHOUT WRITTEN AUTHORIZATION.

REV.: 8